EXPLODED VIEW (SET)

IMPORTANT SAFETY NOTICE

Many electrical and mechanical parts in this chassis have special safety-related characteristics. These parts are identified by ⚠ in the EXPLODED VIEW.
It is essential that these special safety parts should be replaced with the same components as recommended in this manual to prevent Shock, Fire, or other Hazards.
Do not modify the original design without permission of manufacturer.

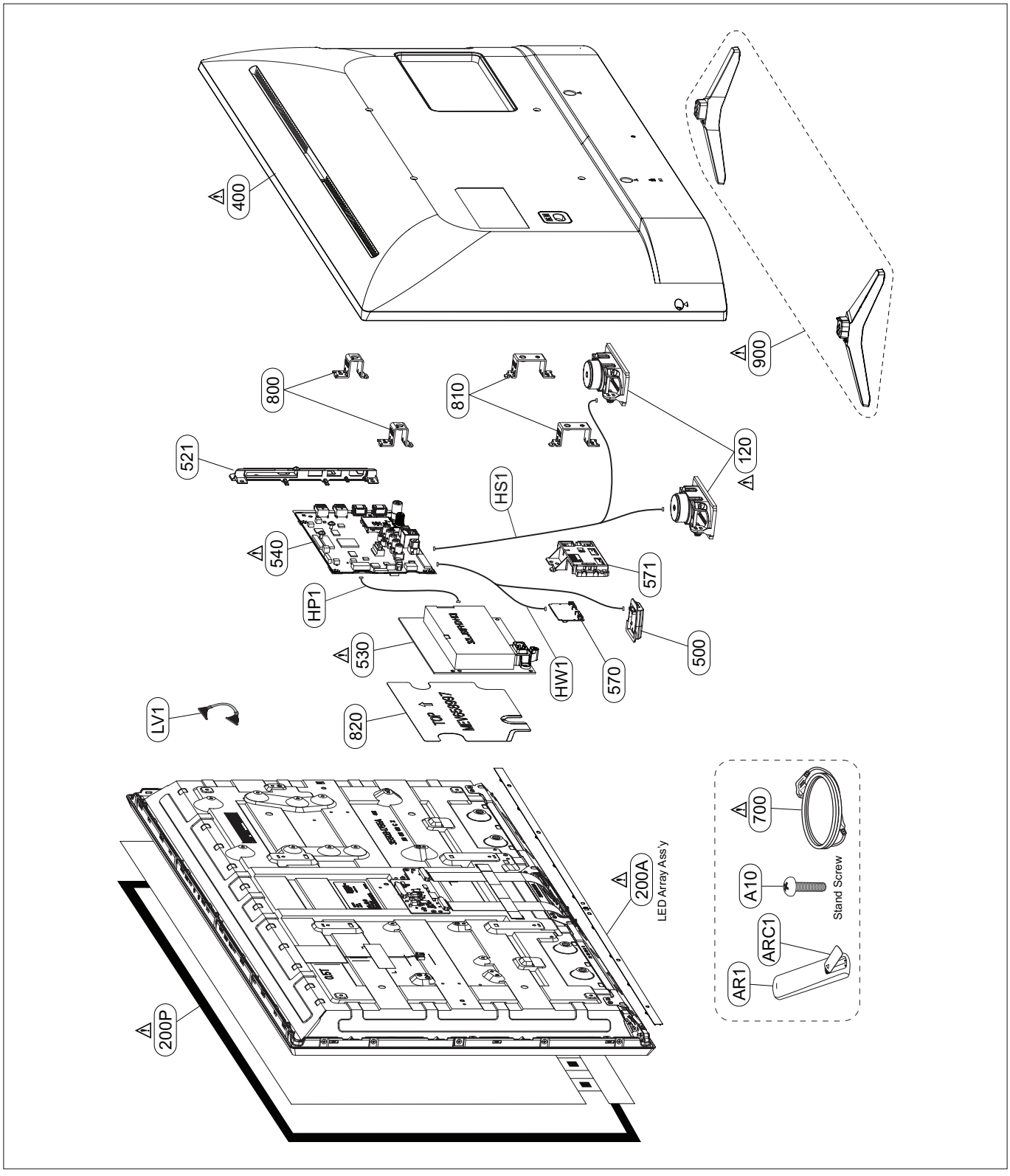

Copyright © 2019 LG Electronics Inc. All rights reserved.
Only training and service purposes.

EXPLODED VIEW (MODULE)

IMPORTANT NOTICE

MRC use only

* MRC : Module Repair Center

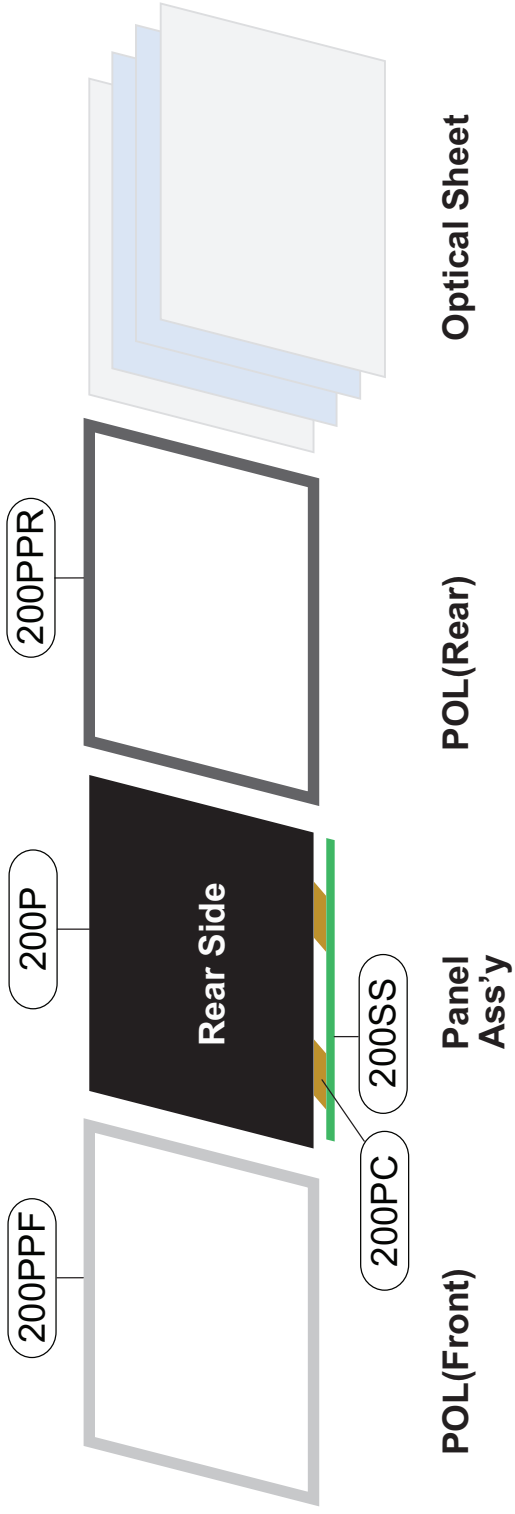

Item	Inch Location# Status
	32Inch
Panel Ass'y	200P
POL(Front)	200PPF
POL(Rear)	200PPR
COF	200PC
Source PCB	200SS

Copyright © 2019 LG Electronics Inc. All rights reserved.
Only training and service purposes.